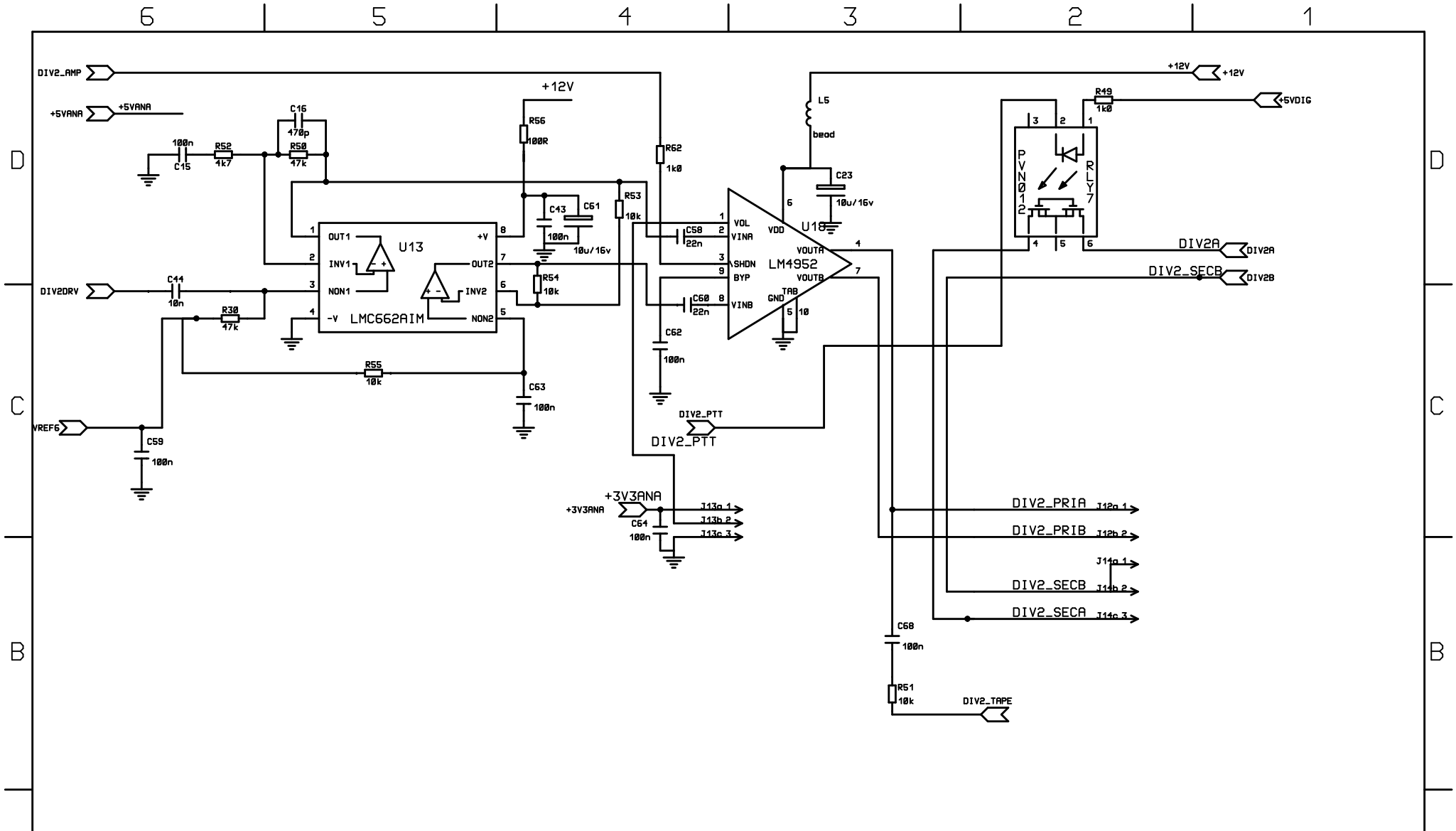

C-Tecnics Subsea Video

System	Drawing	Issue
COLOURWATCH DIGITAL	CWDXXXX	B

Title: STANDALONE DIVER COMMS - div2 drive

Date	Drawn	Sheet
20-10-06	JMG	5 of 6