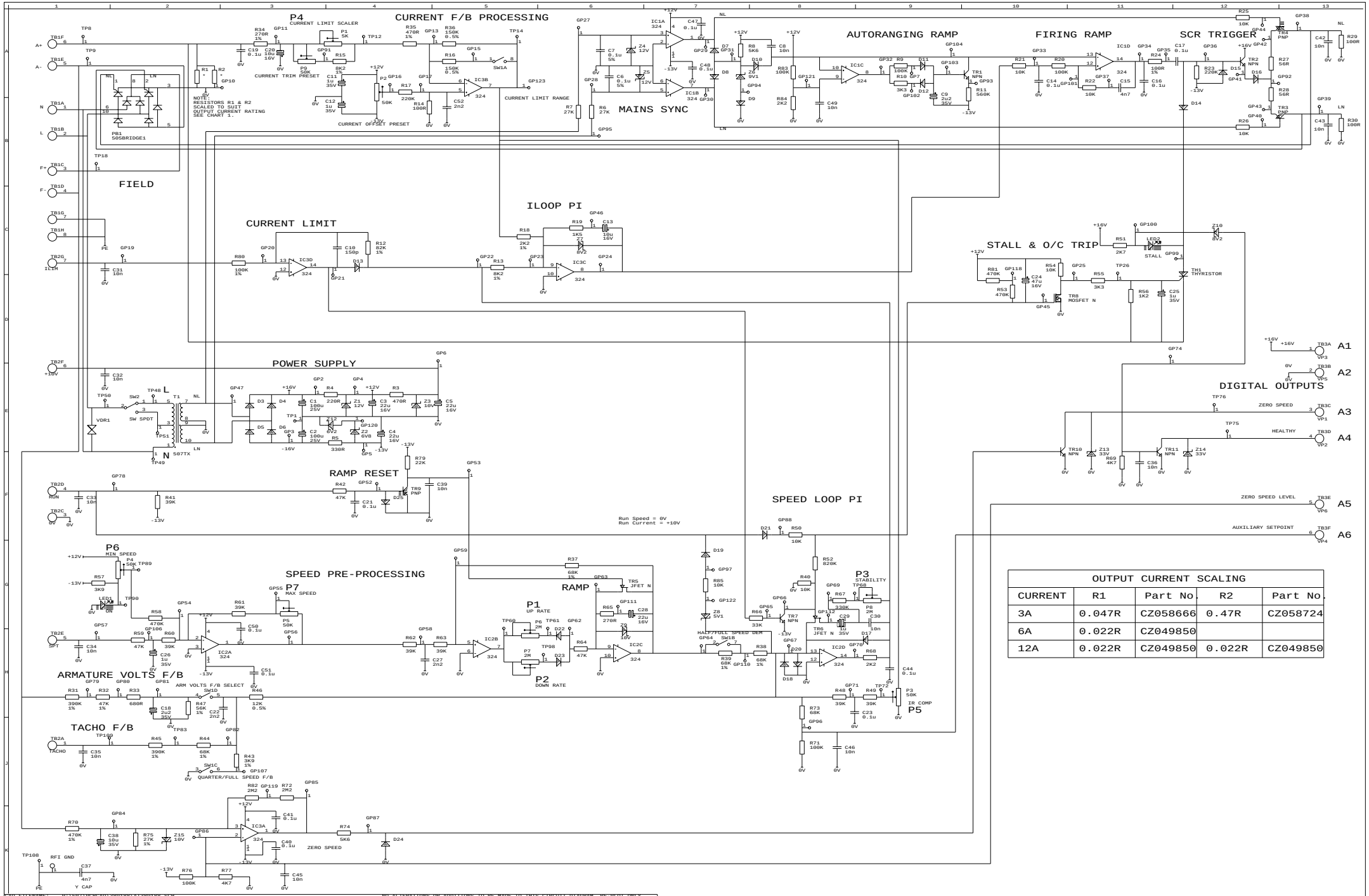

OUTPUT CURRENT SCALING				
CURRENT	R1	Part No.	R2	Part No.
3A	0.047R	CZ058666	0.47R	CZ058724
6A	0.022R	CZ049850		
12A	0.022R	CZ049850	0.022R	CZ049850

CAD FILENAME: P:\507\PCBCAD\389188\AI389188.SCH

NO ALTERATIONS OR ADDITIONS TO BE MADE TO THIS CIRCUIT DIAGRAM. RE-PLOT ONLY

DRAWN: ARIS P. /GDR

CHECKED

KE059691 Iss 2

EUROTHERM DRIVES Ltd.

TITLE

CIRCUIT DIAGRAM
FOR
506/507/508 SERIES SINGLE PHASE DC CONTROLLER

STD OR SMT: SMT

© EUROTHERM DRIVES 19 95

DRAWING NUMBER: AI389188F

SHT. 1 OF 1