AC10
Version 2.32 Template

IP20 frame 1~2 (0.2kW~2.2kW)
IP20 3Ph 400V frame 3~5 (3.7kW~22kW)
Not for IP20 3Ph 230V frame 3~5, use IP20 frame 6~12 template

Inputs in 'Frame Dependent Colour' are frame dependent, see manual for details.
Inputs in 'Restricted Access Colour' can only be changed when drive is not running.

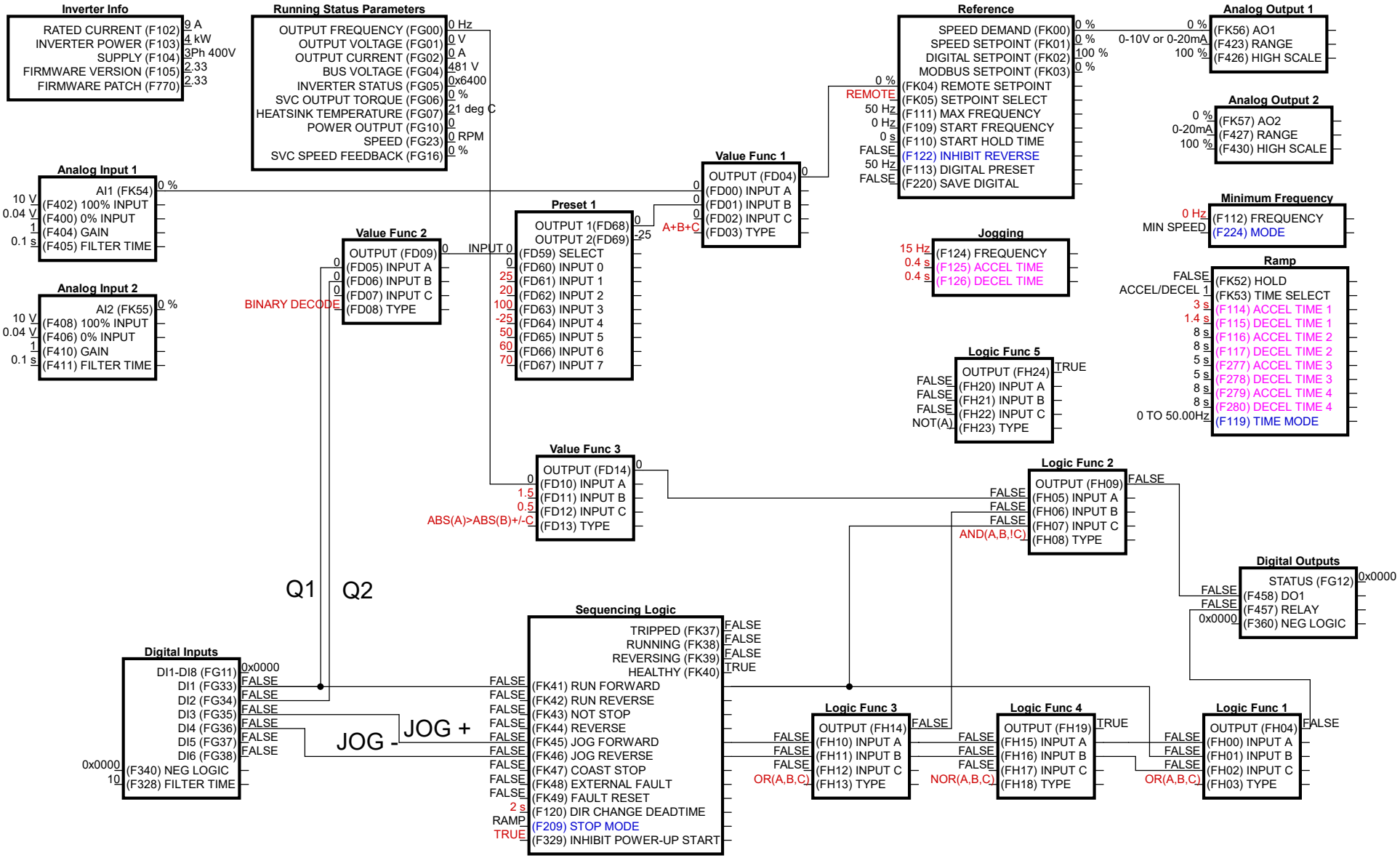

BASIC SPEED CONTROL

DWN			SIZE A	DWG. NO.	RFA
CHK		/1/PRALKA-7.051	ISSUE		
APP			SCALE	SHEET	1 OF 6
EDIT	LOC				